IS31BL3506A Boost LED Backlight Driver Evaluation Board Guide

Description

The IS31BL3506A evaluation board features IS31BL3506A, a boost converter LED driver designed for low power backlighting solutions. IS31BL3506A features an integrated MOSFET switch that enables it to drive multiple LED's in series. The IC regulates the current going through the LED via a set of external, low value sensing resistors. The device adjusts the PWM duty cycle of the switch to maintain a constant 0.3V voltage at the FB pin.

Features

- Supply voltage range from 2.7V to 5.5V
- Drive series strings of 9 LEDs
- PWM or DC voltage dimming
- Frequency of PWM is 500Hz ~ 500kHz
- 1.0MHz high speed switching frequency
- Available in TSOT-23-6 package

Quick Start

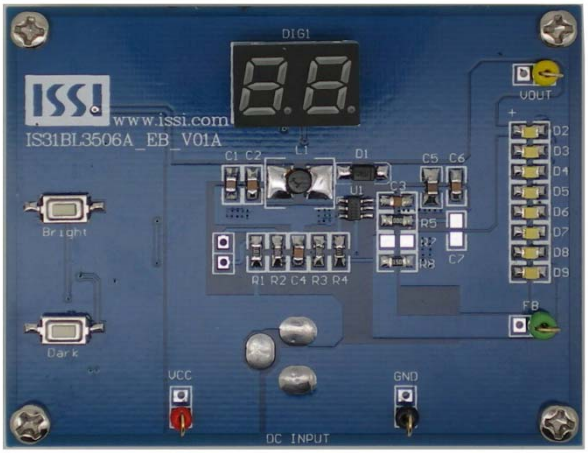

Figure 1: Photo of IS31LT3506A Evalutaion Board

Recommended Equipment

- 5.0V, 2A power supply

Absolute Maximum Ratings

- ≤ 5.5V power supply

Caution: Do not exceed the voltage listed above. Doing so may cause damage to the board.

Procedure

The IS31BL3506A demo board is fully assembled and tested. Follow the steps listed below to verify board operation.

Caution: Do not turn on the power supply until all connections are completed.

1. Ground the power supply by connecting its ground pin to GND and positive pin to VCC.
2. Alternatively, a power supply may be directly connected to DC IN.
3. Supply power to the board and check the current. If it exceeds 500mA, please check the circuit. If problems arise, contact ISSI.
4. Press bright or dark button to change the current through the LED.
5. The LED intensity spectrum has 32 levels, is controlled by the bright/dark button. Highest intensity (32) corresponds to brightest setting.

Ordering Information

Part No.	Temperature Range	IC Package
IS31BL3506A-TTLS2-EB	-40°C to +85°C (Industrial)	TSOT-23-6 (3mm x 2mm)

Table 1: Ordering Information

For pricing, delivery, and ordering information, please contact the ISSI team at analog_mkt@issi.com or (408) 969-6600.

Evaluation Board Operation

The IS31BL3506A evaluation board drives constant output current with PWM dimming control. It utilizes a MCU that generates a PWM signal. A low-pass filter converts the PWM duty cycle signal to a DC voltage at the FB pin, resulting in the corresponding change in LEDs current. The current level is displayed on the Dual Digit Display.

Software Support

Please refer to the integrated software program that comes with the evaluation board.

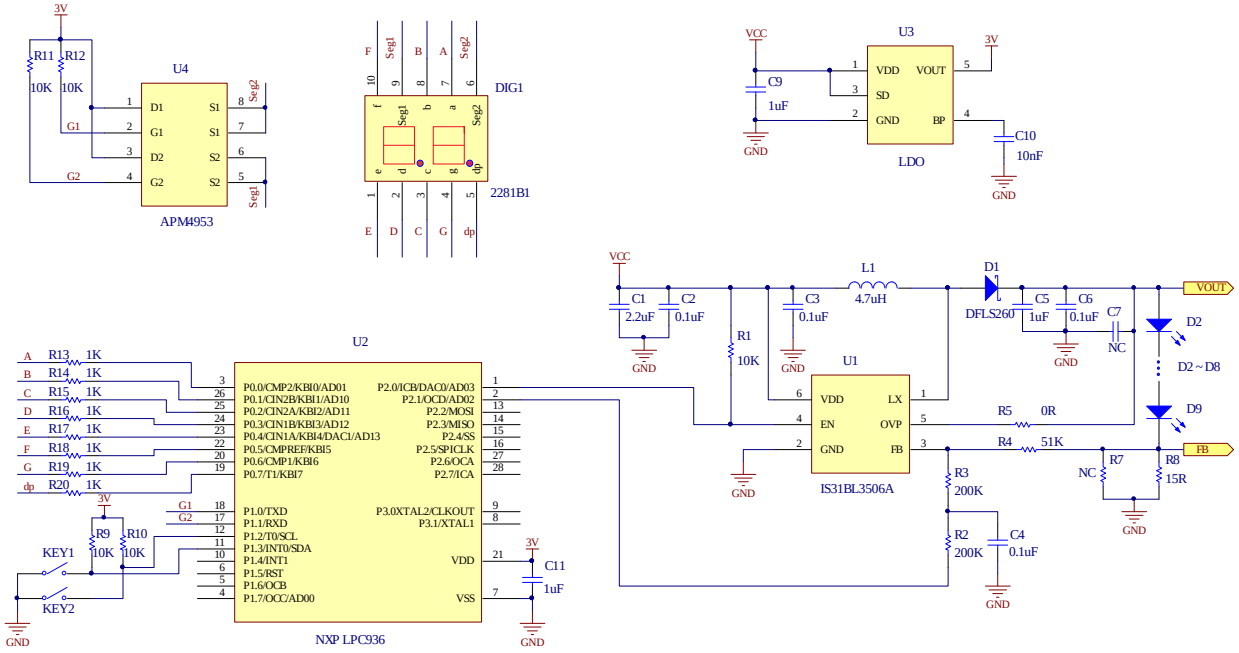

Figure 2: IS31BL3506A Application Schematic. Please refer to the IS31BL3506A datasheet for additional information.

Bill of Materials

Name	Symbol	Description	Qty	Supplier	Part No.
LED Driver	U1	FxLED Boost Converter Driver	1	ISSI	IS31BL3506A
MCU	U2	System Microcontroller	1	NXP	P89LPC936
LDO	U3	Low-Dropout Regulator	1	PAM	PAM3101DAB300
PMOS	U4	PMOS	1	Anpec	APM4953
Display	DIGI	Dual Digit Display, Common Anode	1	ZSO	2281BS
Diode	D1	Schottky Diode, SMD	1	Diodes	DFLS260
Diode	D2-8	White LED Diode, SMD	7	Everlight	EHP-C04/UT01-P01/TR
Inductor	L1	IND,4.7μH,±20%,SMD	1	Microgate	0805, 4.7μ H
Resistor	R1,R9-12	RES,10k,1/16W,±5%,SMD	5	-	-
Resistor	R2-3	RES,200k,1/16W,±5%,SMD	2	-	-
Resistor	R4	RES,51k,1/16W,±5%,SMD	1	-	-
Resistor	R5	RES,0Ω,1/16W,±5%,SMD	1	-	-
Resistor	R7	Not Connected	1	-	-
Resistor	R8	RES,15Ω,1/16W,±5%,SMD	1	-	-
Resistor	R13-20	RES,1k,1/16W,±5%,SMD	8	-	-
Capacitor	C1	CAP,2.2μF,16V,±20%,SMD	1	-	-
Capacitor	C2-4,C6	CAP,0.1μF,16V,±20%,SMD	4	-	-
Capacitor	C5,C9,C11	CAP,1μF,16V,±20%,SMD	3	-	-
Capacitor	C7	Not Connect	1	-	-
Capacitor	C10	CAP,10nF,16V,±20%,SMD	1	-	-

Table 2: Bill of Materials. Refer to Figure 2 for more information.

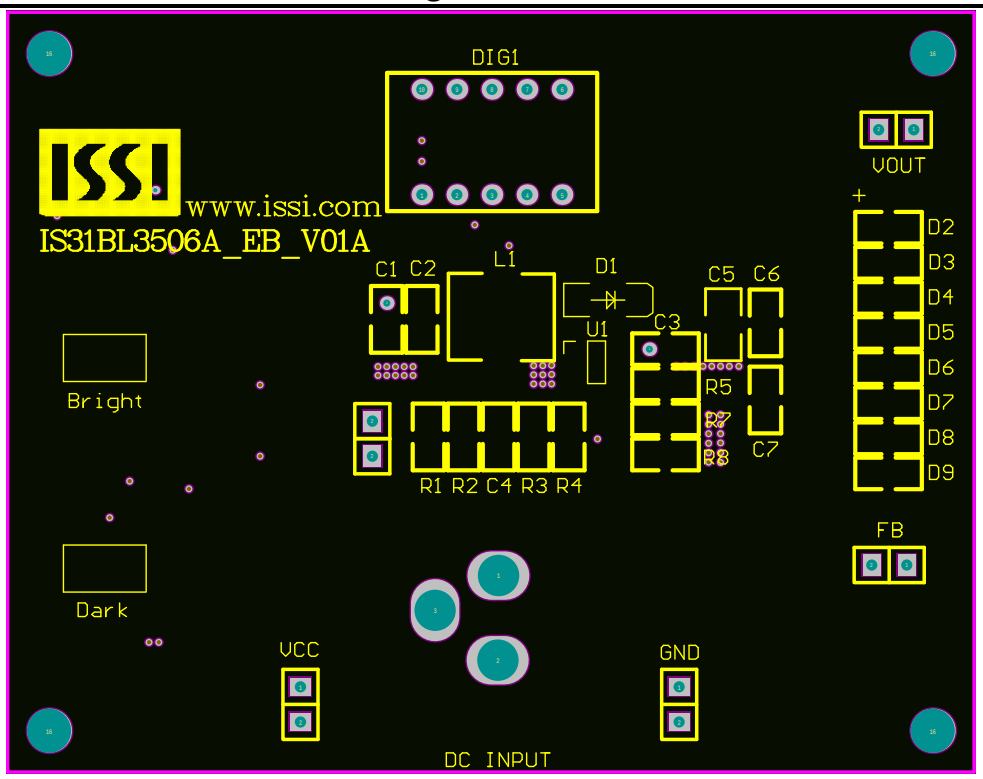

Figure 3: Board Component Placement Guide -Top Layer

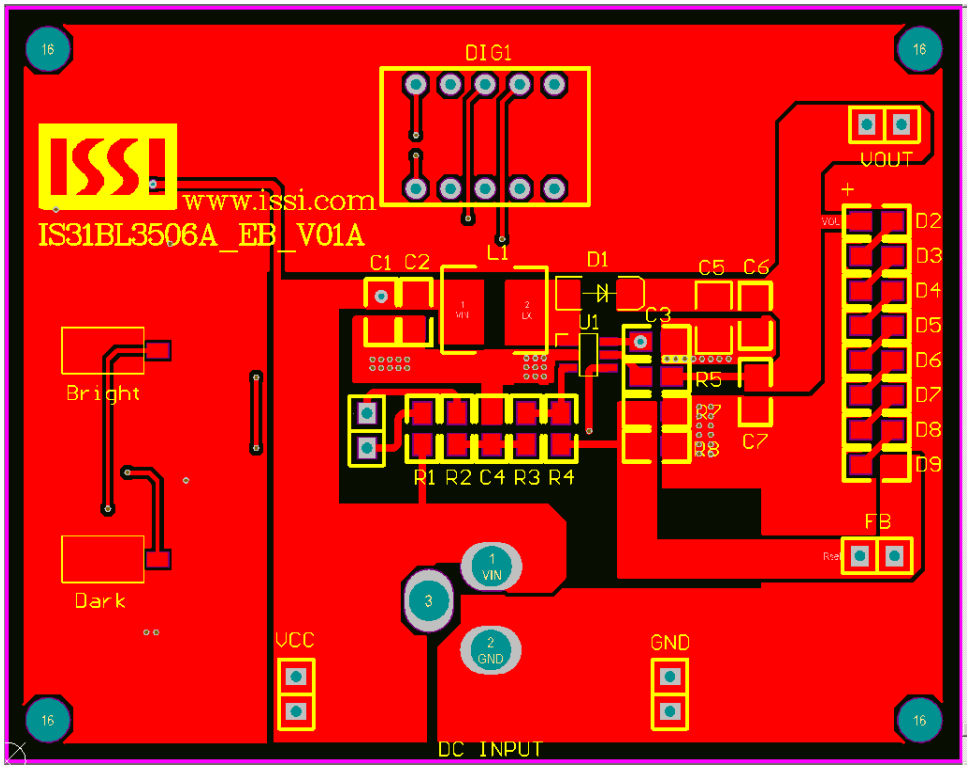

Figure 4: Board PCB Layout- Top Layer

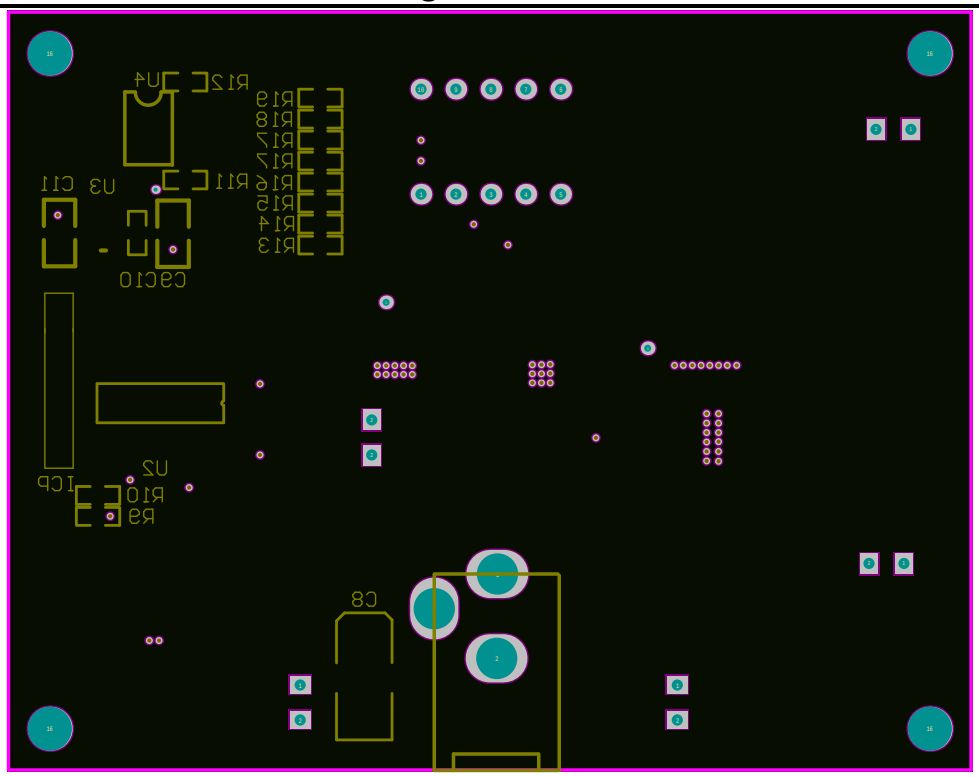

Figure 5: Board Component Placement Guide -Bottom Layer

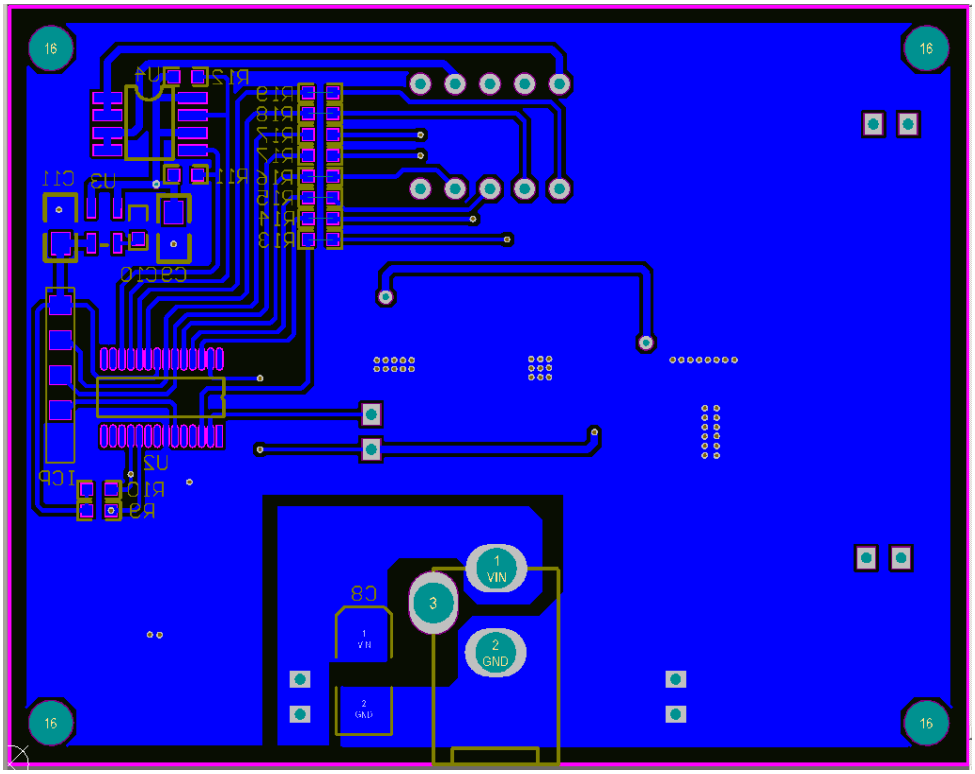

Figure 6: Board PCB Layout-Bottom Layer

Copyright © 2011 Integrated Silicon Solution, Inc. All rights reserved. ISSI reserves the right to make changes to this specification and its products at any time without notice. ISSI assumes no liability arising out of the application or use of any information, products or services described herein. Customers are advised to obtain the latest version of this device specification before relying on any published information and before placing orders for products.
Integrated Silicon Solution, Inc. does not recommend the use of any of its products in life support applications where the failure or malfunction of the product can reasonably be expected to cause failure of the life support system or to significantly affect its safety or effectiveness. Products are not authorized for use in such applications unless Integrated Silicon Solution, Inc. receives written assurance to its satisfaction, that:
a.) the risk of injury or damage has been minimized;
b.) the user assume all such risks; and
c.) potential liability of Integrated Silicon Solution, Inc is adequately protected under the circumstances.